CARSON MANUFACTURING CO., INC.
5451 NORTH RURAL STREET
INDIANAPOLIS, IN 46220
(888) 577 6877 www.carsonsirens.com

TECHNICAL BULLETIN

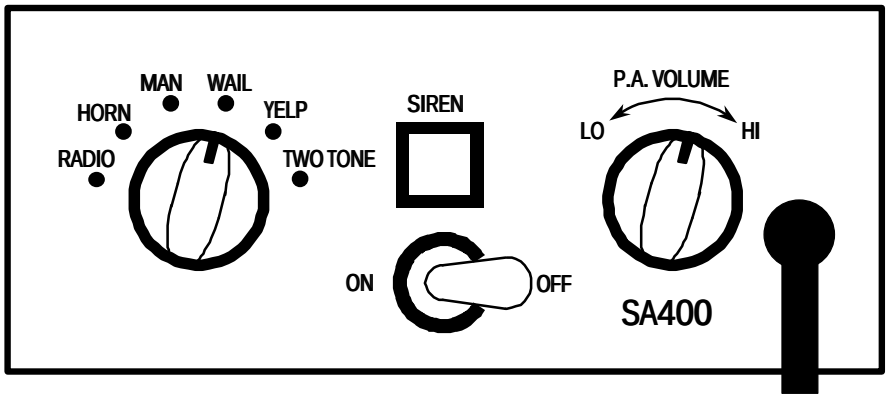

INSTALLATION AND OPERATING MANUAL

SA-400-53 14V
SA-400-53 28V
SA-400-53 PG (Positive GND)

WARNING

Sound Hazard - Sound level from siren speaker (>120dBA @ 10 feet) may cause hearing damage. Do not operate siren without adequate hearing protection for you and anyone in immediate vicinity. (Ref. OSHA 1910.95 for occupational noise exposure guidelines)

SA-400-53 SPECIFICATIONS

INPUT POWER:	11-16 Volts DC, 8 Amps DC per 100W Speaker (SA-400-53 14,PG) 22-32 Volts DC, 4 Amps DC per 100W Speaker (SA-400-53 28)
SIREN MODE OUTPUT POWER:	15 VDC input, 100W speaker(s) (SA-400-53 14,PG) 30 VDC input, 100W speaker(s) (SA-400-53 28) One speaker - 105 Watts RMS Two speakers - 180 Watts RMS Rating not available for 58W or 80W speakers
AUDIO MODE OUTPUT POWER:	14 VDC input, 100W speaker(s) (SA-400-53 14,PG) 28 VDC input, 100W speaker(s) (SA-400-53 28) One speaker - 40 Watts RMS Two speakers - 80 Watts RMS Rating not available for 58W or 80W speakers
SIREN FREQUENCY:	600Hz - 1350Hz Nominal TWO-TONE - 450Hz and 600Hz
CYCLE RATES:	WAIL - 14 cycles/min YELP - 190 cycles/min TWO-TONE - 1 cycle/min
AUDIO RESPONSE:	200Hz - 10KHz +/-3db Harmonic Distortion Less than 3% @ 1KHz (SA-400-53 14,PG) Harmonic Distortion Less than 7% @ 1KHz (SA-400-53 28)
RADIO INPUT SENSITIVITY:	0.75VAC Input Min. for 40 Watts RMS Output (1 spkr)
OPERATING TEMPERATURE:	-15° F to +140° F
SIZE:	6" Wide X 2-3/8" High X 6-1/4" Deep
WEIGHT:	4 pounds
NIGHT VISIBILITY:	Pilot light in siren pushbutton when power is on
PROTECTION:	High Voltage – Siren output stops with input voltage above highest rating Stops high output power from blowing speaker Reverse Polarity - Fuse blows when power is wired backwards Shorted Output – Fuse blows if speaker shorts (a common problem)

NOTICE

Due to continuous product improvements, we must reserve the right to change any specifications and information, contained in this manual at any time without notice.
Carson Manufacturing Co., Inc. makes no warranty of any kind with regard to this manual, including, but not limited to, the implied warranties of merchantability and fitness for a particular purpose.
Carson Manufacturing Co., Inc. shall not be liable for errors contained herein or for incidental or consequential damages in connection with the furnishing, performance, or use of this manual.

INSTALLATION

Proper installation of the unit is essential for years of safe, reliable operation. Please read all instruction **before** installing the unit. Failure to follow these instructions can cause serious damage to the unit or vehicle and may void warranties.

SAFETY PRECAUTIONS

For the safety of the installer, vehicle operator, passengers and the community please observe the following safety precautions. **Failure to follow all safety precautions and instructions may result in property damage, injury or death.**

Qualifications - The installer must have a firm knowledge of basic electricity, vehicle electrical systems and emergency equipment.

WARNING

Sound Hazard - Sound level from siren speaker (>120dBA @ 10 feet) may cause hearing damage. Do not operate siren without adequate hearing protection for you and anyone in immediate vicinity. (Ref. OSHA 1910.95 for occupational noise exposure guidelines)

Mounting - Mount the unit for easy access by the vehicle operator. DO NOT mount in air bag deployment area. Assure clearances before drilling in vehicle. To prevent internal damage mounting bolts must not enter case more than 1/4".

Wiring - Use wiring capable of handling the current required. Make sure all connections are tight. Route wiring to prevent wear, overheating and interference with air bag deployment. Install and check all wiring before connection to vehicle battery.

Testing - Test all siren functions after installation to assure proper operation. Test vehicle operation to assure no damage to vehicle.

Keep These Instructions - Keep these instructions in the vehicle or other safe place for future reference. Advise the vehicle operator of the location.

MOUNTING

The mounting bracket supplied can be installed above or below the unit. Choose a mounting location convenient to the operator and away from any air bag deployment areas. Inspect behind mounting area for clearance. Assure adequate ventilation to prevent overheating. Consider wire routing and access to connections, as well as microphone bracket placement. Install mounting bracket to vehicle using 1/4" hardware (not supplied).
If mounting in a rack or console, make sure that mounting bolts do not enter case more than 1/4".

May need to set RADIO VOLUME ADJUST inside the unit before final mounting and installation

A microphone clip along with mounting screws (CP3633) holds the microphone in place.

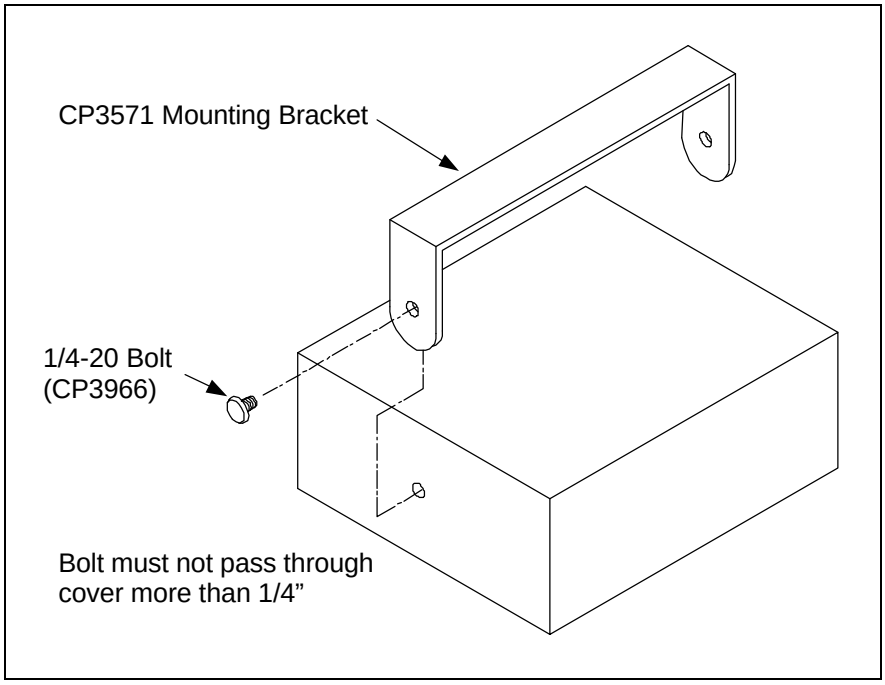

ELECTRICAL CONNECTIONS

Disconnect vehicle battery before making any electrical connections.

Electrical connections to the amplifier are made using the wiring harness supplied. If the amplifier needs service the connector can be easily removed without unwiring the harness. The power supply for the amplifier must be capable of delivering peak currents up to 50 amps for adequate short circuit protection and reliable operation. The preferred source is directly at the vehicle battery. A fuse on the unit protects from overload.

Wire Size and Termination - The diagram shows the minimum wire size used for each connection. If the wire is longer than 10 ft. use the next larger wire size. Use only high quality crimp connectors for installation on the vehicle.

Negative Connection (Black) - Both leads must be used. Connect to negative battery connector or high current buss.

Positive Connection (Red) - Both leads must be used. Connect to positive battery connector or high current buss. A power relay may be used.

Speaker Connection (Brown) - Both leads must be used. Connect 1 lead to each terminal or lead of the speaker. When used with 2 speakers connect each brown lead to both speaker terminals or leads (parallel circuit). Observe polarity (phasing) when connecting 2 speakers.

Optional Radio Input Connection (Blue) - Connect 1 lead to each terminal of the radio speaker or output connector. The input is isolated and polarity is not important. May need to set RADIO VOLUME ADJUST inside the unit.

Optional Auxiliary Input Connection (White) - The Auxiliary Input allows an external source to activate the Siren push button function. The diagram shows a horn ring connection example. Activated by positive or negative input. NOTE: Permanent disconnection of the vehicle horn is NOT recommended.

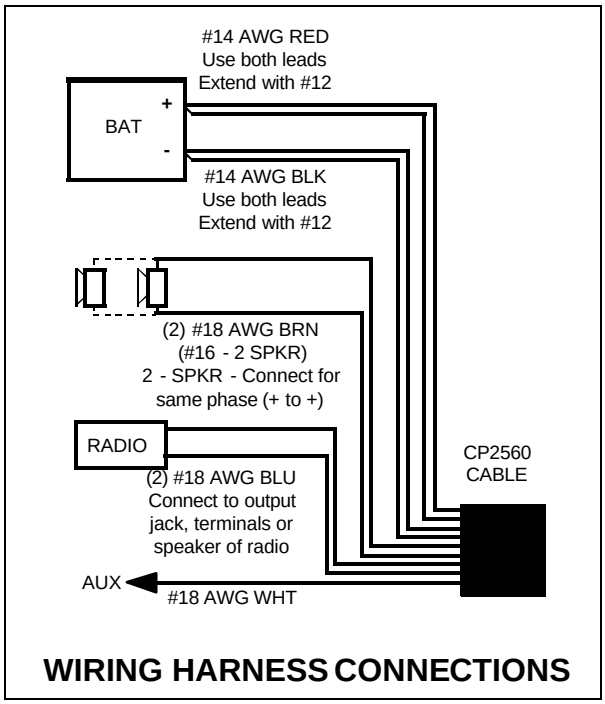

WIRING HARNESS CONNECTIONS

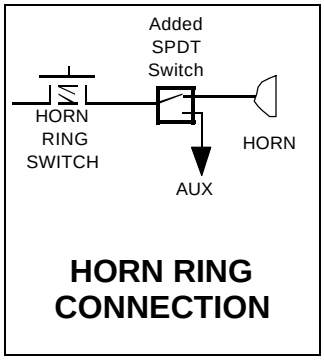

HORN RING CONNECTION

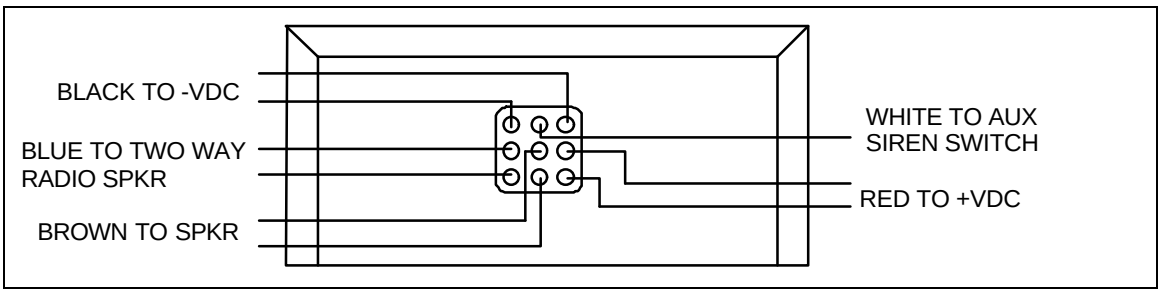

OPERATION

WARNING **Sound Hazard** - Sound level from siren speaker (>120dBA @ 10 feet) may cause hearing damage. Do not operate siren without adequate hearing protection for you and anyone in immediate vicinity. (Ref. OSHA 1910.95 for occupational noise exposure guidelines)

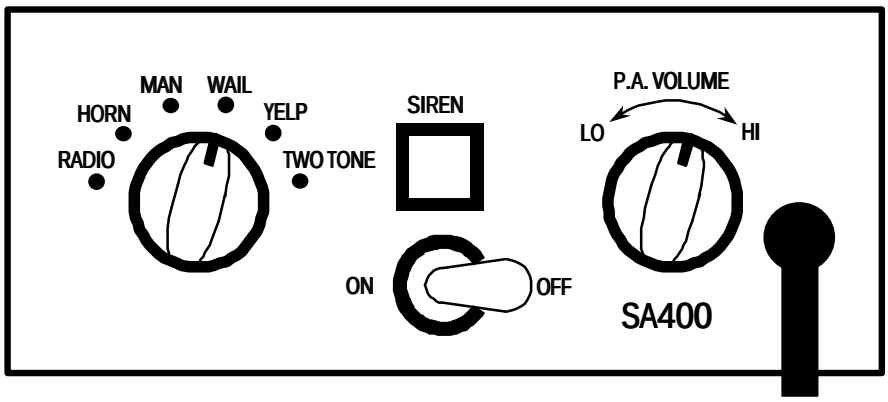

The **OFF/ON** Toggle Power Switch controls the siren power. The siren may be left on any time the vehicle is in operation. The power should be turned off when vehicle is not being used to conserve battery power.

The Rotary Function Switch selects various operating modes. These modes are as follows:

RADIO - This mode reproduces, or repeats, the output of a radio. The radio must be connected and RADIO VOLUME ADJUSTed for this mode to function. No overrides available in this mode.

HORN - Also considered a standby mode. Horn and PA Override available in this mode.

MAN - The siren tone is controlled Manually with SIREN button. PA Override available in this mode.

WAIL - The siren produces a normal rise-fall tone pattern. This mode should be used on highways or areas with constant traffic flow. Yelp and PA Override available in this mode.

YELP - The siren produces a moderate warble tone. This mode should be used in lightly congested areas. Horn and PA Override available in this mode.

TWO TONE - The siren produces two alternating frequencies like the European. This mode should be used at intersections or in highly congested areas. Horn and PA Override available in this mode.

OVERRIDE FUNCTIONS

PUBLIC ADDRESS (PA) OVERRIDE - By pressing the microphone button any siren tone output is turned off, allowing the operator to use the siren as a public address amplifier. The siren tone resumes when the button is released. (Hold the microphone close to your lips for proper operation and adjust the PA VOLume Control)

HORN OVERRIDE - By pressing the SIREN button the siren tone output is replaced by the horn tone. The siren tone resumes when the button is released. (This feature is not available in WAIL mode.)

YELP OVERRIDE - Available only in WAIL mode. By momentarily pressing the SIREN button the tone output is switched to the Yelp tone. Pressing the button again switches the tone output back to Wail.

RADIO VOLUME ADJUST

The RADIO VOLUME ADJUST is a one time setting which depends on the radio connected and its normal volume.

The siren cover must be removed to access the adjustment. The cover is held in place by a snap-fastener on the back of the unit. While holding the case on the sides press hard with your fingers on the back of the unit. The chassis will slide out the front.

Switch siren to RADIO mode and turn on the power. With the volume on the radio itself set to normal level, set the RADIO VOLUME ADJUST to the desired level. Turn off power and press the chassis back into the cover.

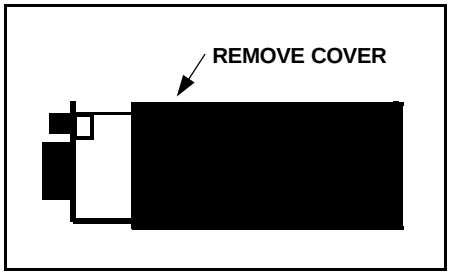

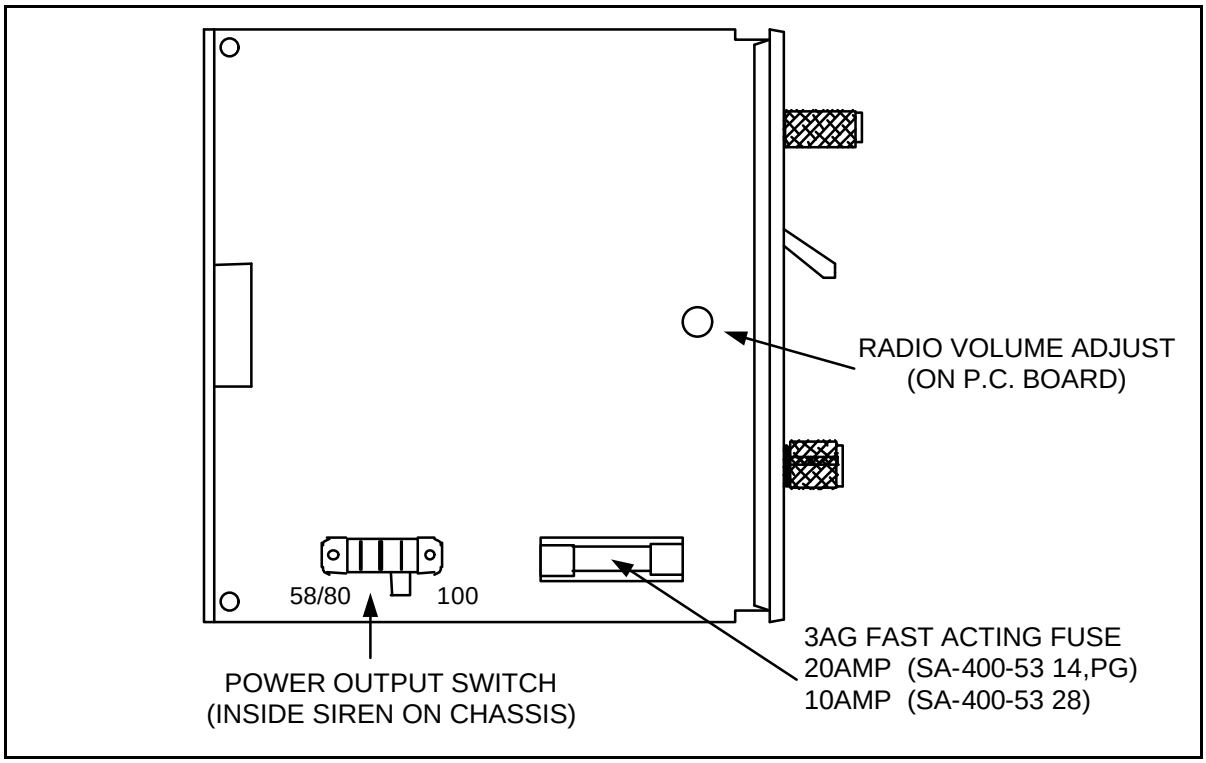

POWER OUTPUT ADJUST

The POWER OUTPUT adjustment is a one time setting which depends on the speaker(s) used.

The siren cover must be removed as described above to access the adjustment.

For 58W or 80W speaker(s), set the POWER OUTPUT SWITCH TO “58/80”.
For 100W speaker(s) set the POWER OUTPUT SWITCH to “100”.

SERVICE

This unit is designed to provide years of reliable service under even the worst conditions. Many times there may appear to be a problem with the unit when the true problem is in the speaker(s) or improper installation. The following chart shows typical symptoms and possible causes.
A blown internal fuse doesn't necessarily mean that the unit is bad. If a speaker or speaker lead is shorted this fuse will blow before the unit is damaged. Disconnect the SPKR leads and replace the fuse. If the siren emits a sound when in the Yelp position it is OK. Check the speaker(s) or leads for possible shorting.

PROBLEMS

Symptom	Possible Cause	Check
No Power or siren output	Power switch not turned on Bad Speaker Connector or connections loose Internal fuse blown Loose connection at power source	Does Siren Pushbutton Light come on? Do you hear a “pop” when turned on? With siren on, yelp selected, listen for tone in amplifier. Is an external fuse or circuit breaker used? Are the power leads connected to a good buss?
No siren tone – PA works	High Voltage Protection Mic Button stuck	The input voltage must be less than highest rating. Does Mic Button release properly?
No PA	PA volume not set properly Function switch in Radio	Try turning the PA volume control. PA is not available in Radio position.
Distorted siren sound	Speaker assembly loose Intermittent Aux Input connection Low Vehicle voltage	Is the speaker bell or tip loose? Is the Aux Input used and wired properly? The input voltage must be greater than lowest rating.
Intermittent siren tone	High Voltage Protection Connector loose Loose connection at power source Mic Button activation Circuit breaker in supply connection	Is the vehicle voltage regulator working properly? Is the connector tight on the back of the unit? Check for loose leads back to power source. Is something lying on the microphone? Is a circuit breaker used with at least 50A rating?
Horn or manual stuck on	Siren switch stuck Aux Input improperly connected	Does the Siren pushbutton switch return fully when released? Is the Aux Input used and wired properly?
No Radio	Unit not connected to a radio Radio volume too low	Is the radio connected properly to the unit? Can you hear the radio in the vehicle? Try adjusting the internal radio volume control.

RETURN

If you have any questions concerning this or any other Carson product, please contact our **Technical Service Department** at (888) 577-6877. Many issues can be handled over the phone. We can also be reached via e-mail at **service@carsonsirens.com**

If a product must be returned for any reason, please contact our Technical Service Department to obtain a Returned Merchandise Authorization number (RMA#) before you ship the product to Carson. Please write the RMA# clearly on the package near the mailing label. Be sure to provide a return address, contact and phone number, along with a brief description of the problem.

PARTS

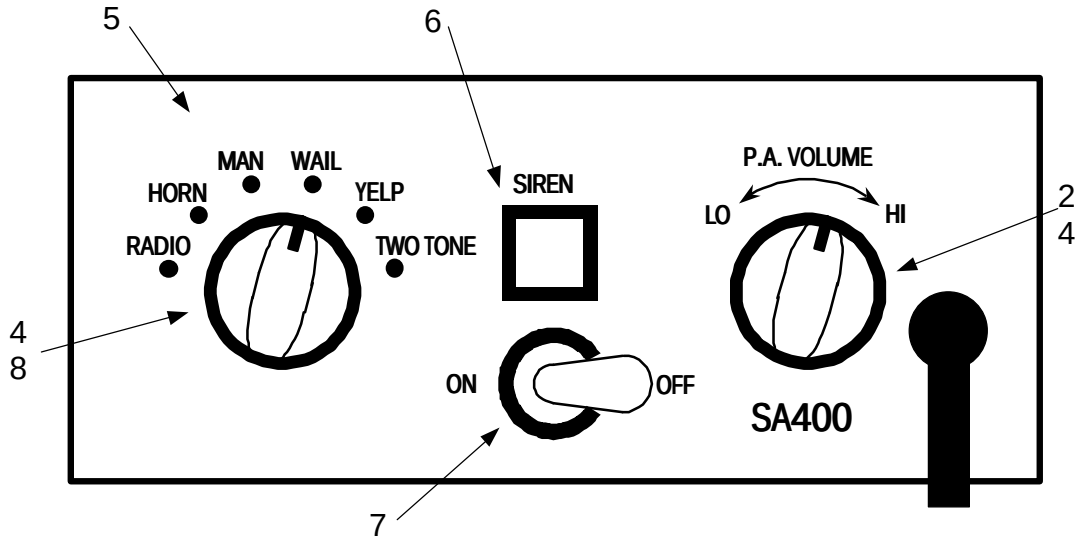

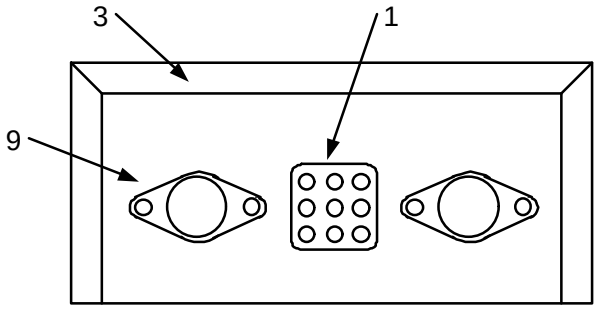

Item	Part #	Description
	CP3966	Bolt, mounting, 1/4-20 X 3/8 (2 required)
	CP3571	Bracket, mounting
1	CP2602	Cable, internal chassis plug wiring harness
	CP2560	Cable, external wiring harness
2	CP2856	Control, PA volume (350 ohm)
3	ES00004-04	Cover with spring retainer
4	658-214L	Knob, rotary function switch and PA volume control (replace with CP4852 Knob)
5	CP2360	Label, front panel
	CM7382	Lamp, T-1-3/4 14V Bi-pin (Chicago Miniature Lamp, Inc. #7382) (used on SA-400-53 14,PG)
	CM7327	Lamp, T-1-3/4 28V Bi-pin (Chicago Miniature Lamp, Inc. #7327) (used on SA-400-53 28)
	M-20	Microphone with preamplifier
	CP3633	Microphone clip with mounting screws
6	ES00004-06	Switch, pushbutton assembly siren (Switch alone is Switchcraft #LUS001, Cap #P2349-1)
7	2FA53-73	Switch, toggle power (Carling Switch #2FA53-73)
8	CP2744	Switch, rotary function
9	2N5884	Transistor, output (2 required) (Motorola #2N5884 or Carson #CP2742)